# AMA-IE2 132 S6 (B3)

AMTECS

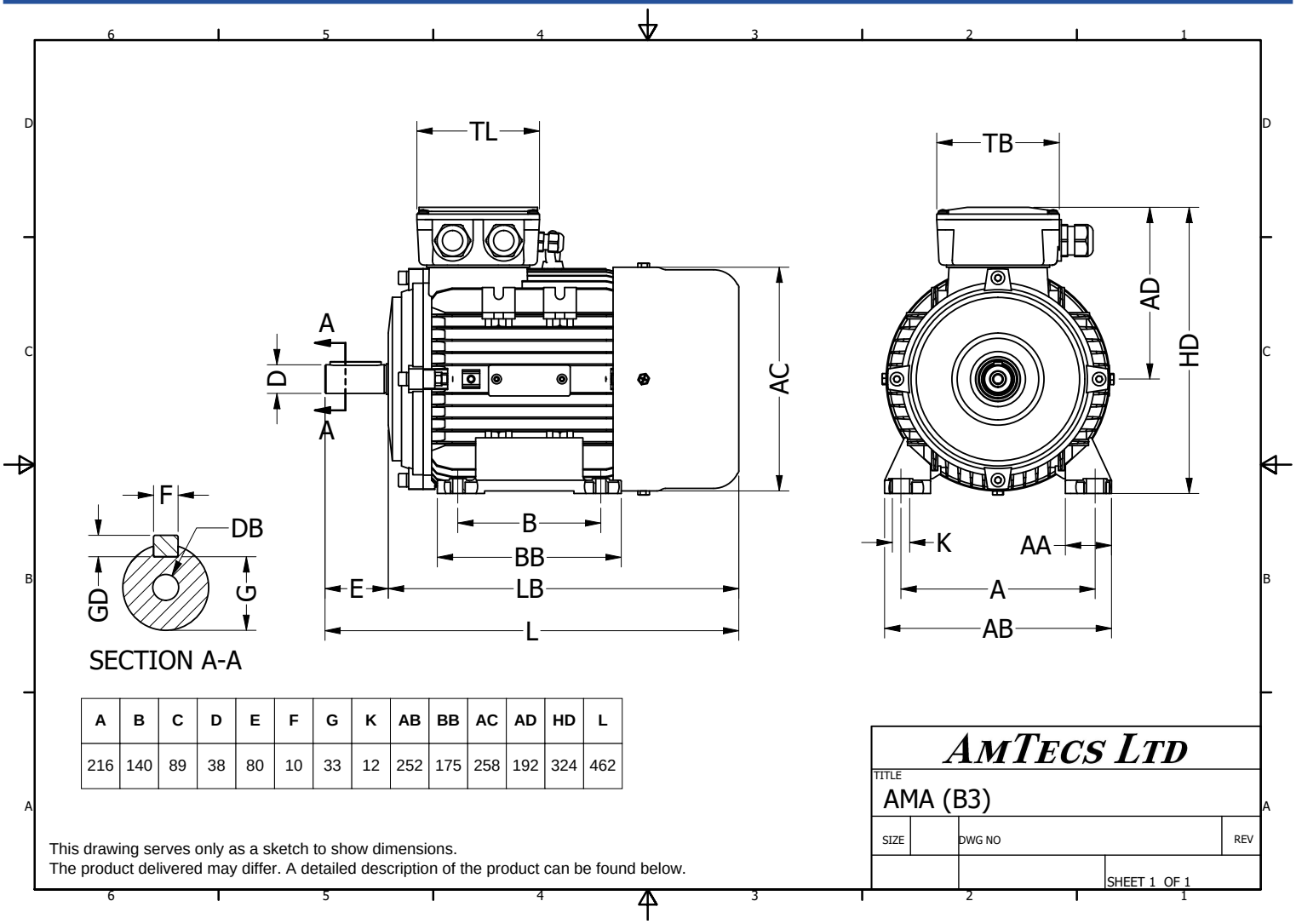


| A | B | C | D | E | F | G | K | AB | BB | AC | AD | HD | L |
|---|---|---|---|---|---|---|---|---|---|---|---|---|---|
| 216 | 140 | 89 | 38 | 80 | 10 | 33 | 12 | 252 | 175 | 258 | 192 | 324 | 462 |

This drawing serves only as a sketch to show dimensions.
The product delivered may differ. A detailed description of the product can be found below.

| | | | |
|---|---|---|---|
| Specification | **IEC 60034-1** | Efficiency class | **IE2** |
| Manufacturer | **AmTecs** | Load data | 100% |
| Motor type | **AMA-IE2 132 S6** | Efficiency | **83.3** % |
| Rated power | **3** kW **S1** Duty | Power factor | **0.76** |
| Speed | **964** rpm | Sound pressure level (1m) | **58** dB(A) |
| Voltage | **220V / 400V** | Resistance R20 (open) | |
| Frequency | **50** Hz | Resistance R20 (Delta) | |
| Connection | **Delta / Star** | | |
| Full load current | **11.83 A / 6.83 A** | Full load torque | **29.7** Nm |
| No-load current | | Starting / Full load torque | **1.8** |
| Enclosure | **IP55** | Pull up / Full load torque | |
| Insulation class | **F (temp. rise B)** | Pull out / Full load torque | **2.4** |
| Max. ambient temp | **40** °C | | |
| Max. altitude | **1000** mtr above sea level | | |
| Comment | | | |
| Cable entry | **M25 x 1.5** | Starting / Full load current (DOL) | **4.5** |
| Construction | **Aluminium** | Starting / Full load current (Y/D) | |
| Weight | **44** Kg | Rotor Inertia | |
| Type number | | Bearing DE | **6308** |
| Warranty | | Bearing NDE | **6308** |

*We make all efforts to better our products. Versions, technical data and figures could be changed therefore. They are not binding before written confirmation.*