Pressed Steel Housing Flange Units (light–duty)

SAPFL 200
(SA2–fitted)

SBPFL 200
(SB2–fitted)

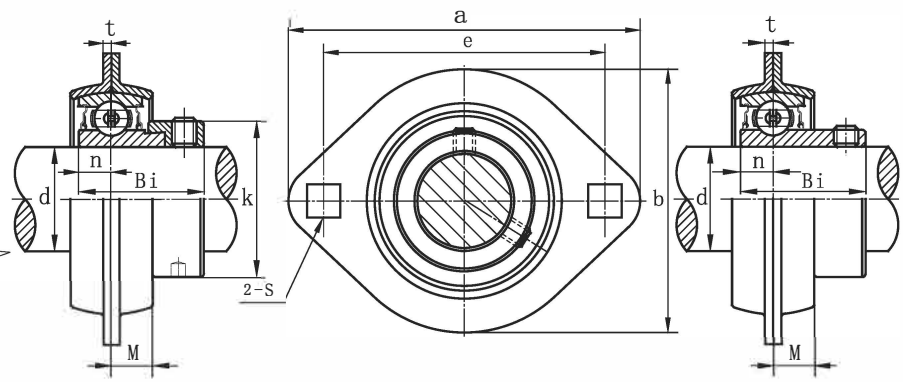

Bearing unit		Shaft Dia.		Dimensions(in)or(mm)							Bolt used			Bearing	weight		Bearing	weight	Housing
No.		d		a	e	M	b	t	s	n		Bi	k	No.		Bi	No.		No.
		(in.)	(mm)					(mm)			(in.)	(mm)			(kg)			(kg)	
SAPFL SBPFL	**201**		12	$3\frac{3}{16}$	$2\frac{1}{2}$	$\frac{9}{32}$	$2\frac{5}{16}$	2.0	$\frac{9}{32}$	0.2362	$\frac{1}{4}$	1.1260	1.1260	SA 201	0.22	0.8661	SB 201	0.19	PFL201
	201–8	$\frac{1}{2}$		81	63.5	7.0	59		7.1	6.0	M6	28.6	28.6	201–8		22	201–8		
SAPFL SBPFL	**202**		15	$3\frac{3}{16}$	$2\frac{1}{2}$	$\frac{9}{32}$	$2\frac{5}{16}$	2.0	$\frac{9}{32}$	0.2362	$\frac{1}{4}$	1.1260	1.1260	SA 202	0.22	0.8661	SB 202	0.19	PFL202
	202–10	$\frac{5}{8}$		81	63.5	7.0	59		7.1	6.0	M6	28.6	28.6	202–10		22	202–10		
SAPFL SBPFL	**203**		17	$3\frac{3}{16}$	$2\frac{1}{2}$	$\frac{9}{32}$	$2\frac{5}{16}$	2.0	$\frac{9}{32}$	0.2362	$\frac{1}{4}$	1.1260	1.1260	SA 203	0.22	0.8661	SB 203	0.19	PFL203
	203–11	$\frac{11}{16}$		81	63.5	7.0	59		7.1	6.0	M6	28.6	28.6	203–11		22	203–11		
SAPFL SBPFL	**204–12**	$\frac{3}{4}$		$3\frac{17}{32}$	$2\frac{13}{16}$	$\frac{5}{16}$	$2\frac{5}{8}$	2.0	$\frac{23}{64}$	0.2756	$\frac{5}{16}$	1.2205	1.3110	SA 204–12	0.24	0.9843	SB 204–12	0.24	PFL204
	204		20	90	71.5	8	67		9.0	7.0	M8	31	33.3	204		25	204		
SAPFL SBPFL	**205–14**	$\frac{7}{8}$												SA 205–14			SB 205–14		
	205		25	$3\frac{3}{4}$	3	$\frac{23}{64}$	$2\frac{25}{32}$	2.0	$\frac{23}{64}$	0.2953	$\frac{5}{16}$	1.2205	1.5000	205	0.32	1.0630	205	0.28	PFL205
				95	76.0	9	71		9.0	7.5	M8	31	38.1			27			
	205–16	1												205–16			SB 205–16		
SAPFL SBPFL	**206–18**	$1\frac{1}{8}$												SA 206–18			SB 206–18		
	206		30	$4\frac{7}{16}$	$3\frac{9}{16}$	$\frac{3}{8}$	$3\frac{5}{16}$	2.6	$\frac{7}{16}$	0.3150	$\frac{3}{8}$	1.4055	1.7520	206	0.41	1.1811	206	0.38	PFL206
	206–19	$1\frac{3}{16}$		113	90.5	9.5	84		11	8.0	M10	35.7	44.5	206–19		30	206–19		
	206–20	$1\frac{1}{4}$												206–20			206–20		